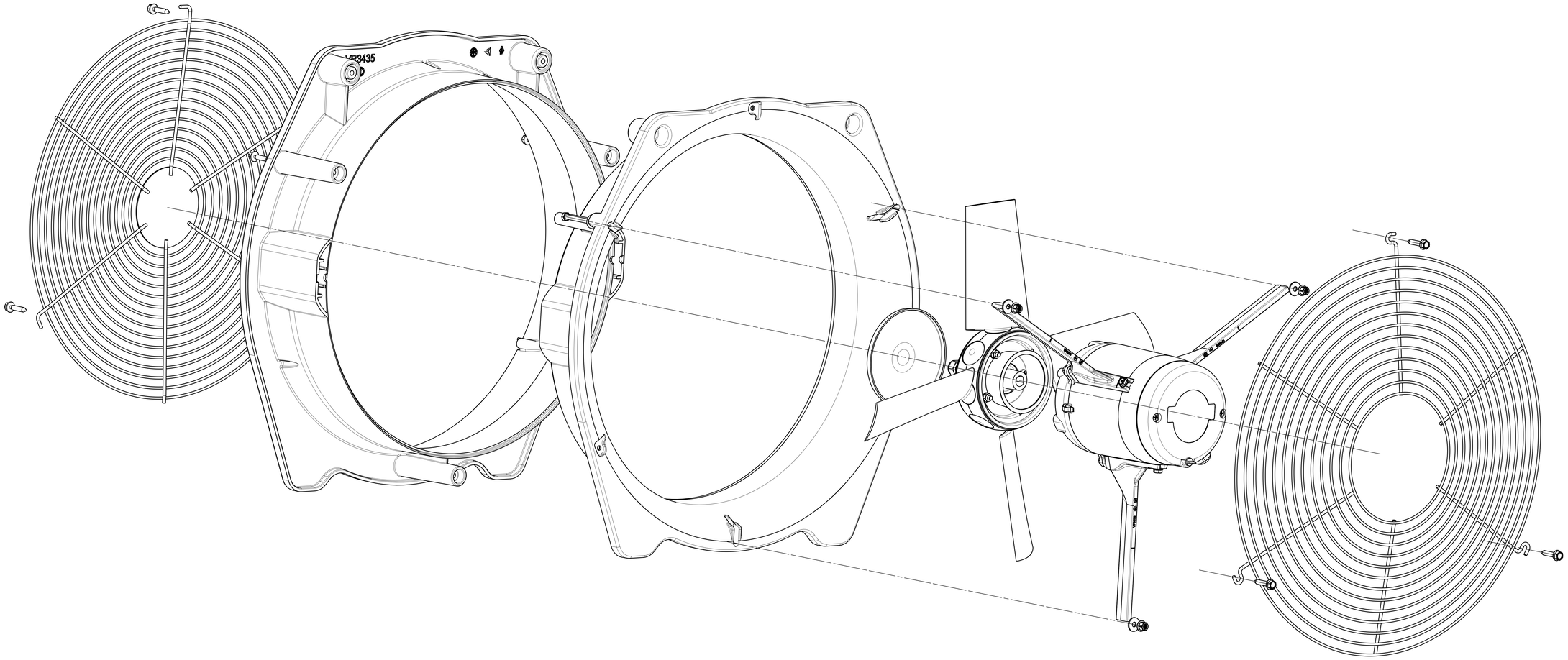

Wut. no.	Rev.	Date	Init.	Remarks
	A	18-2-2021		

Drawn	Y. Popal	Remarks	Weesenmeme companies Vosterenmeme Ventilation BV PO Box 3005 5803BA Venlo - Netherlands
Date	28-05-2020		
Checked			

General roughness	General tolerance according2	Material	Surface treatment	CAD file	Units	Projection	Scale
	ISO 2768-mK			NX	mm		1:1

Description	Size	Drawing no.	Rev.
Assembly greenhouse fan 475 mm with C06 motor	A0	VS2519	A

© Copyright