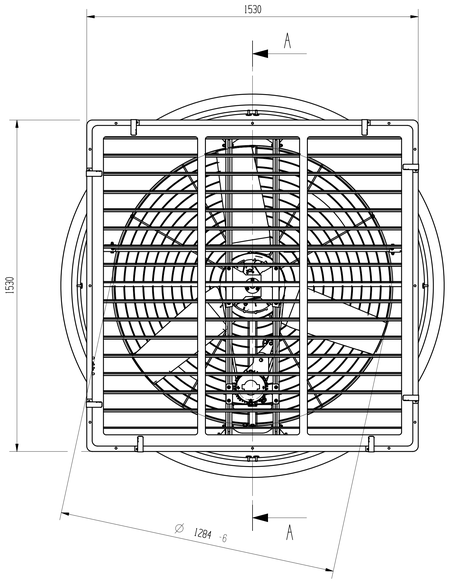

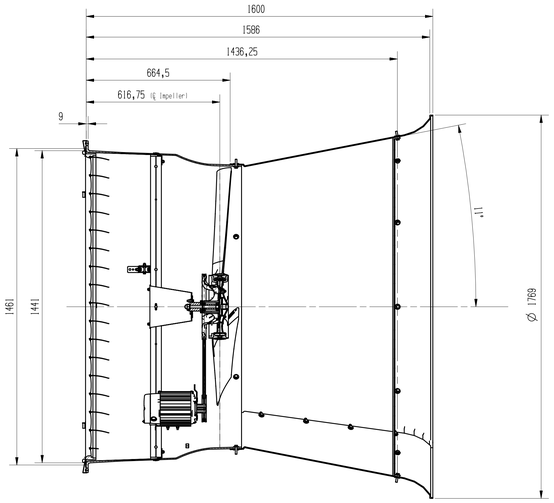

SECTION A-A

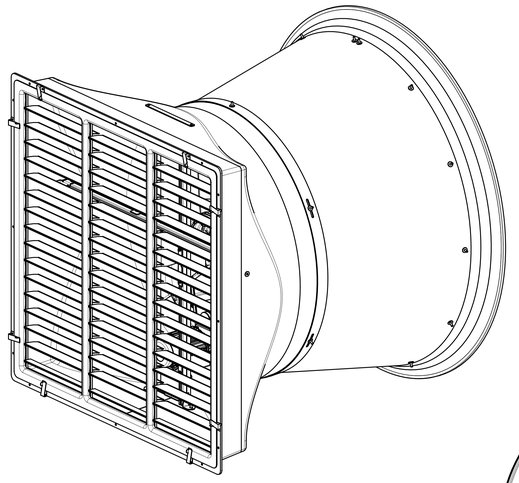

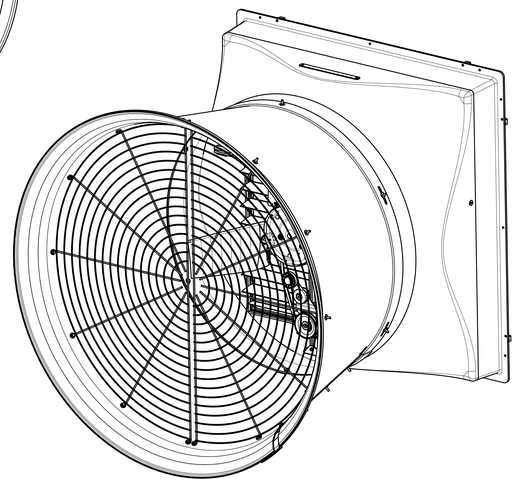

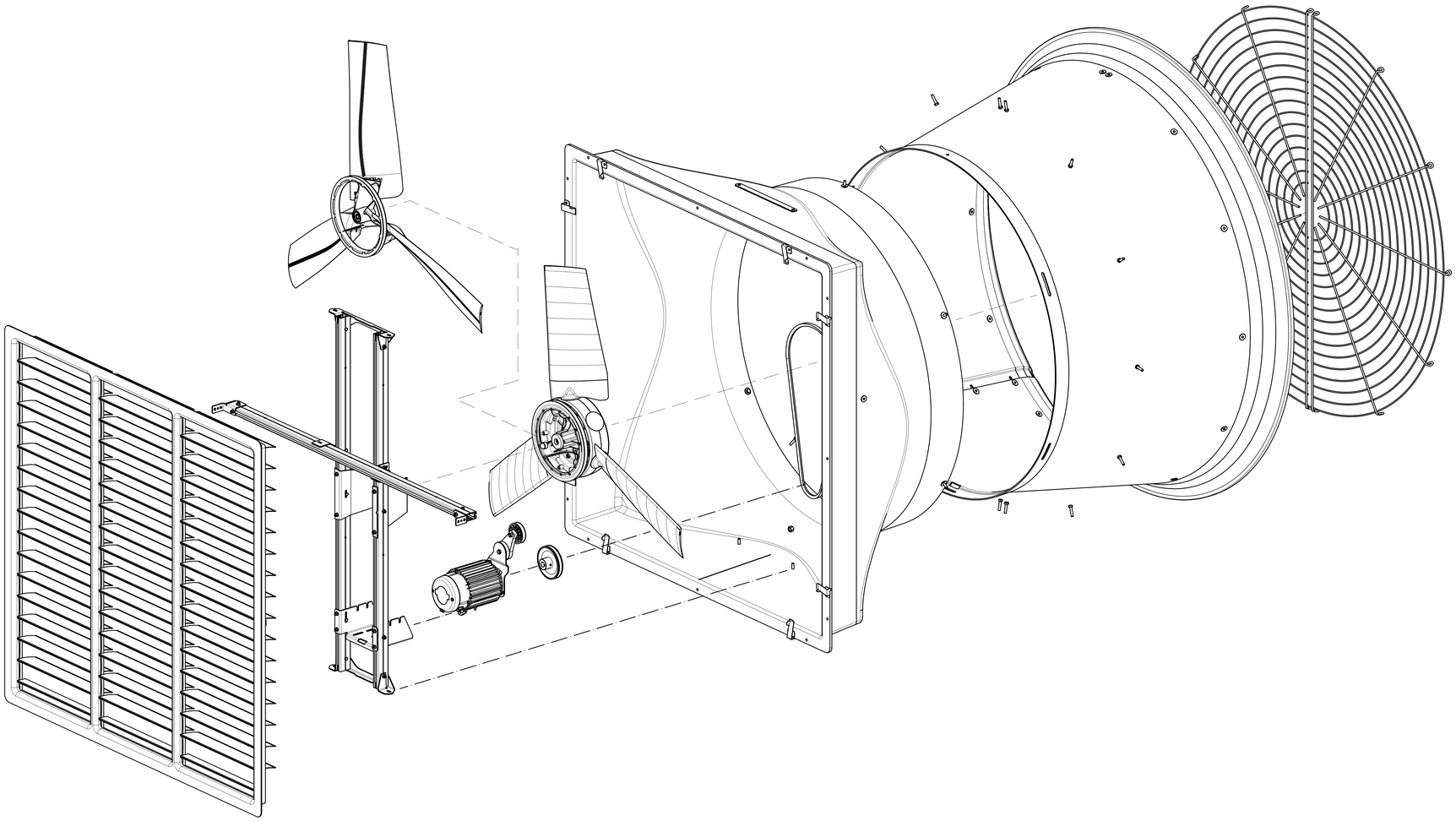

	A	13-5-2019	WHo	
Mod. no.	Rev.	Date	Init.	Remarks

Drawn	W. Honderdors	Remarks	Weegermans companies Weegermans Ventilation BV PO Box 3025 5902RA Venlo - Netherlands
Date	13-05-2019		
Checked			

General roughness	General tolerance according:	Material	Surface treatment	CAD file	Units	Projection	Scale
	ISO 2768-mK			NX	mm		1:1

Description	Size	Drawing no.	Rev.
Assembly 50inch Cone Fan	A0	VS1446	A

© Copyright